THE POWER BEHIND POWER.

Technical data
MESSKO® MTRAB®. Dehydrating breather

6822884/05 Ver. 2.5 EN

© All rights reserved by Maschinenfabrik Reinhausen
Dissemination and reproduction of this document and use and disclosure of its content are strictly prohibited unless expressly permitted.
Infringements will result in liability for compensation. All rights reserved in the event of the granting of patents, utility models or designs.
The product may have been altered since this document was published.
We reserve the right to change the technical data, design and scope of supply.
Generally the information provided and agreements made when processing the individual quotations and orders are binding.
The product is delivered in accordance with MR's technical specifications, which are based on information provided by the customer. The customer has a duty of care to ensure the compatibility of the specified product with the customer's planned scope of application.
The original operating instructions were written in German.

1 Design/versions

This technical document contains detailed information about the technical properties of the product. To place an order, please use the "Bestellangaben-blatt (Inquiry and order specifications)" form, which you will find on our website http://www.reinhausen.com below the respective product. Further information is available in the MR Reinhausen customer portal: https://portal.reinhausen.com.

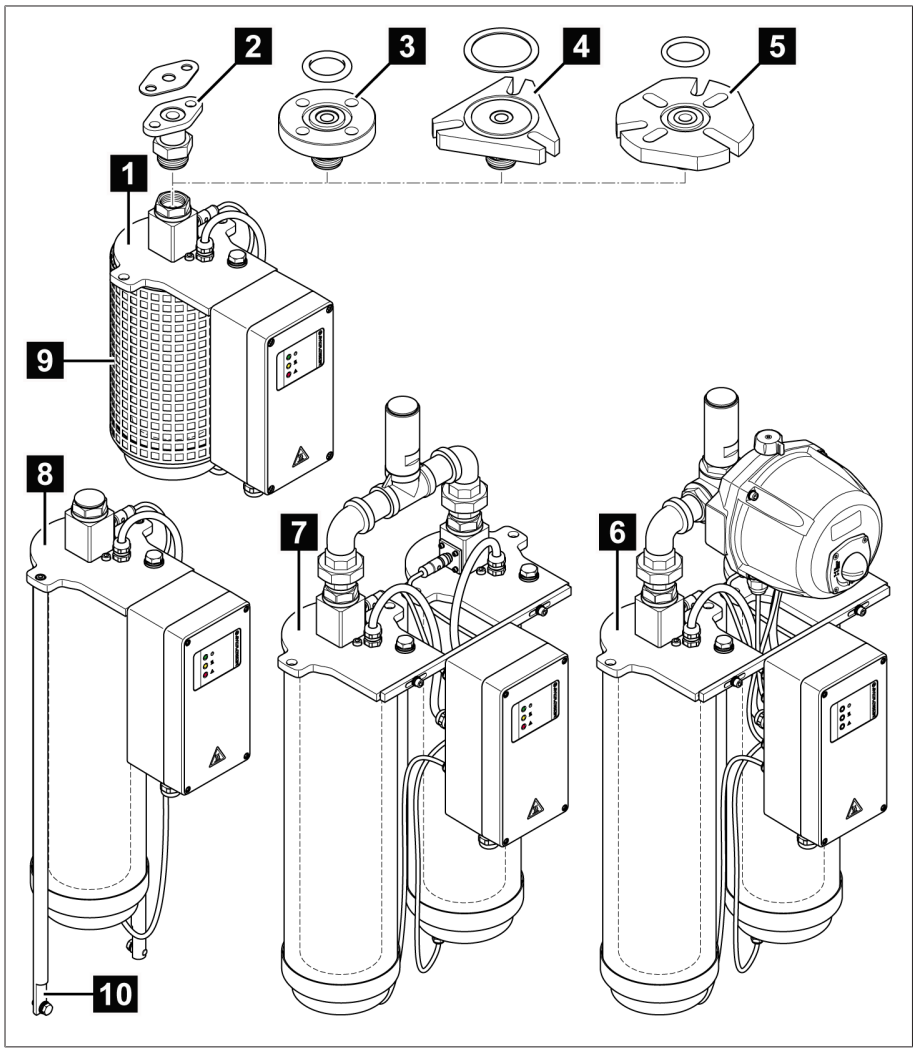

Figure 1: Design

1	DB100	2	2-hole RM flange*)
3	4-hole circular flange*)	4	DIN flange*)
5	Universal flange*)	6	DB200G (not offshore version)
7	DB200D	8	DB200
9	Protective grate (optional)	10	Additional fastening points on the side (optional)

*) For details, see the technical data and dimensional drawings

2 Function description

The dehydrating breather is used in oil-insulated transformers, reactors or tap changers for dehydrating the air sucked into oil conservators.

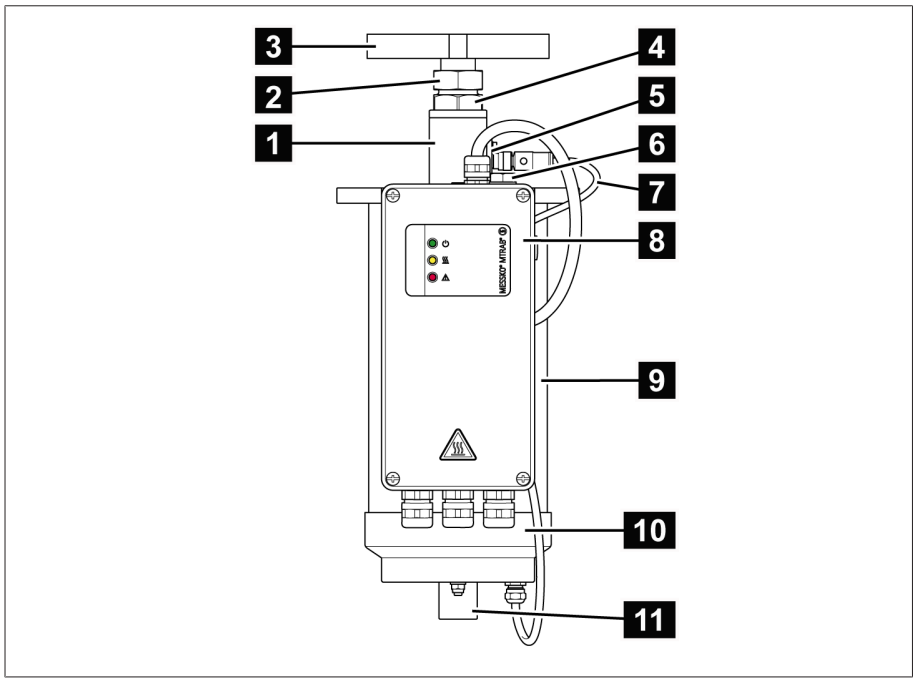

Figure 2: Overview

1	Upper air spout	2	Lock nut
3	Mounting flange (configurable)	4	Nut
5	Temperature and humidity sensor	6	Grounding screw
7	Sensor cable and cable protection (optional)	8	Terminal box (lacquer color configurable)
9	Desiccant container	10	Lower metal flange
11	Dust protection tube with insect protection grille (optional) or with filter heating (optional HT version)		

For illustrations of the various designs, see "Dimensional drawings".

3 Terminal box

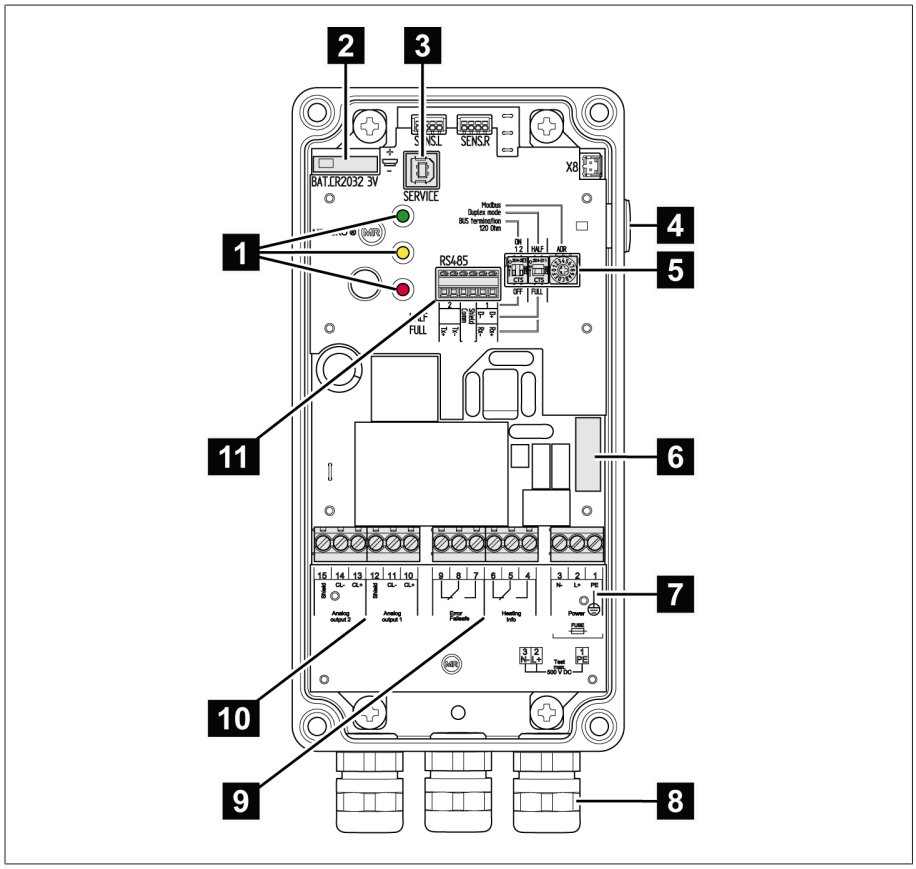

Figure 3: Terminal box

1	LEDs for status display	2	RTC buffer battery (type CR2032)
3	USB service interface (B socket)	4	Test button
5	Modbus settings (optional)	6	Fuse
7	Supply voltage 100...127 V DC/AC 50/60 Hz 200...240 V DC/AC 50/60 Hz	8	Cable gland M20x1.5 (brass/stainless steel) or 1/2″ 14NPT (brass)
9	Signaling relay	10	Analog output 1 (temperature) Analog output 2 (humidity) 0...20 mA or 4...20 mA
11	RS485 interface (optional)		

4 Technical data

The technical data applies to the standard design and may vary depending on the design delivered. Subject to change without prior notice.

Operating conditions	
Location of use	Indoors and outdoors
Pollution degree (terminal box)	4
Relative humidity (operation and storage)	Inside the terminal box: 5 to 95% (non-condensing)
Ambient air temperature	DB100/200/200D: 0...+70 °C / -50...+70 °C HT version*; DB200G: 0...+70 °C / -20...+70 °C HT version*; *) HT version for applications in cold regions, i.e. ambient temperature is continuously below 0 °C over a time period of 20 days.
Storage temperature	-50 °C...+70 °C
Operating temperature	DB100/200/200D: 0...+70 °C / -40...+70 °C HT version*; DB200G: 0...+70 °C / -20...+70 °C HT version*; *) HT version for applications in cold regions, i.e. ambient temperature is continuously below 0 °C over a time period of 20 days.
Degree of protection in accordance with IEC 60529	– Entire device: IPx6 with limitation, application of spray water only from above or from the sides – Terminal box only: IP66 and IP67
Overvoltage category	III
Protection class	I
Installation altitude	Max. 4,000 m above sea level

Design types	
Materials	All external parts are resistant to weathering and UV radiation; version with resistance to saltwater (offshore) optional
Color	Flanges and metal parts: anodized (aluminum) Terminal box: Coating with corrosion-protection class C4H, optional CX or C5H, in accordance with DIN EN ISO 12944-9 RAL 7033 (cement gray) or RAL 7038 (agate gray) or RAL7035 (light gray)
Weight (without flange)	DB100: approx. 8.6 kg DB200: approx. 12.6 kg DB200D: approx. 23.6 kg DB200G: approx. 31.6 kg
Dimensions	See the chapter "Dimensional drawings"

Design types	
Flange connection (flanges optional)	– DIN flange (similar to DIN 42 562-3) including NBR70 gasket in accordance with DIN 5305 and including mounting kit (optional) – 2-hole RM flange (in accordance with DIN 2558) including Centellen WS3820 gasket; for DB100 only (optional) – 4-hole circular flange for 1/2" screws including NBR75 gasket black (optional) – Universal flange, compatible with DN42562 and with 4-hole circular flange with bolt hole diameter 75...110 mm including gasket and mounting kit (optional) – Further customer-specific flanges on request – See dimensional drawings and design
Desiccant	Only use special colorless, non-toxic silica gel (silicon dioxide) sold by Maschinenfabrik Reinhausen GmbH; See application table [▶Section 5, Page 11] for volume

Power supply	
Nominal voltage	200 ...240 V AC, 50/60 Hz, 200...240 V DC Pmax. 2,500 W or 100...127 V AC, 50/60 Hz, 100...127 V DC Pmax. 2,500 W
Power consumption	Max. 100 mA (in normal operation); Increased power consumption during regeneration; refer to the heating current values in the application table [▶Section 5, Page 11]
Heating current	Current during heating process (approx. 1 to 2 minutes after activating the heating): Refer to heating current values in the application table [▶Section 5, Page 11]
External fuse protection	Miniature circuit breaker characteristic C, K, Z with nominal current of 16 A or 20 A
Rated insulation voltage	500 V DC (in accordance with IEC 61010-1) L against protective conductor ⏚ N against protective conductor ⏚
RTC buffer battery	CR2032 (recommendation CR2032 from Renata or CR2032W from Murata Electronics)

Terminal box	
Pressure equalization element	Ventilated to prevent water condensation
Cable glands	M20x1.5 as nickel-plated brass or 1/2"-14NPT as nickel-plated brass or M20x1.5 rust-free stainless steel
Connection terminals	Supply connection, relay, analog outputs: 1.5...4 mm^2, AWG11–15 (solid or flexible), tightening torque 0.5...0.6 Nm RS485 interface: 0.14...1.5 mm^2, AWG15–26 (solid or flexible), tightening torque 0.25 Nm
Status display	3 LEDs (green – operation indicator, yellow – regeneration heating, red – device malfunction) visible from the outside; refer to status messages for the status
Test button	For the device function test
Fuse	5x20 mm; T2A; 250 V (e.g. Littelfuse 477 series 477002)

Signaling contacts	
Contact type	1x change-over contact, silica gel regeneration signaling relay;
	1x change-over contact, device error signaling relay (failsafe)
Contact material	Gold-plated contacts for applications with low switching currents Minimum load: ≥1 mV/1 mA
Dielectric strength	Between circuits and ground: ≥ 2 kV, 50 Hz, duration 1 minute; Between contacts in the open position: ≥ 1 kV, 50 Hz, duration 1 minute; Impulse voltage withstand strength between contacts: ≥3 kV, 1.2/50 µs
Reliable switching capacity	240 V AC, 8 A (IEC 61810, 100,000 switching cycles); 240 V AC, 10 A, 2,000 VA (UL 508, 30,000 switching cycles); 30 V DC, 8 A, 240 W; 240 V DC, 300 mA
Maximum switching capacity	In accordance with IEC 60076-22-7, 1,000 switching cycles: 230 V AC, 1,840 VA / cos phi > 0.5 250 V AC, 2,500 W / resistive load 24 V DC, 192 W / resistive load

Analog outputs (active)	
Output analog 1, left, in the upper air spout	Temperature: -40...+80 °C 4...20 mA: 7.5 °C/mA or optionally 0...20 mA: 6.0 °C/mA Measuring error: 4...20 mA: +/-2.3 °C 0...20 mA: +/-1.8 °C
Output analog 2, right, in the upper air spout	Humidity: 0...100% 4...20 mA: 6.25% R.H./mA or optionally 0...20 mA: 5.0% R.H./mA Measuring error: 4...20 mA: +/- 1.9% R.H. 0...20 mA: +/- 1.5% R.H.
Error signal in the event of sensor failure	< 3.6 mA (with 4...20 mA output signal); > 23 mA (with 0...20 mA output signal)
Load resistance	0...600 Ω

Options	
Offshore	Terminal box with coating in corrosion-protection class CX in accordance with DIN EN ISO 12944-9 Offshore flange version; Cable gland stainless steel version (grade 1.4404)
Insect protective grate	See dimensional drawings in attachment 7 SED 6356099
Cable protection	Protects the cable from damage such as animal bites, designed as a spiral coiled hose (stainless steel, suitable for offshore applications); refer to dimensional drawings in attachment 4 SED 6600056 and attachment 5 SED 6600296
Filter heater	HT version: With heated stainless steel filter; recommended for cold regions with an ambient temperature that is continuously below 0 °C for more than 20 days in order to guarantee proper function
	Switching point < 5 °C (switch on)
Lateral mounting	See dimensional drawings in attachment 2 SED 6356077 and attachment 3 SED 6367297
Protective grate	See dimensional drawings in attachment 7 SED 6356099
Data logger software	For the evaluation of the data
RS485 interface	For connection to a SCADA system
Overvoltage protection	For protection against overvoltages

Standards and directives

Electrical safety	
IEC 61010-1 UL 61010-1 CAN/CSA-C22.2 No. 61010-1	Safety requirements for electrical measurement and control and regulation equipment and laboratory instruments – Protection class I – Overvoltage category III – Contamination level 2
Electromagnetic compatibility	
IEC 61000-6-5, IEC/KC 61000-6-2, IEC/KC 61000-6-4, FCC 47 CFR Part 15B, ICES-003	
Environmental durability tests	
IEC 60529	– Entire device: IPx6 with limitation, application of spray water only from above or from the sides – Terminal box only: IP66 and IP67
IEC 60068-2-1	Dry cold – -25 °C / 96 hours
IEC 60068-2-2	Dry heat +70 °C / 96 hours
Power transformer and reactor accessories	
IEC 60076-22-7	Accessories and fittings
IEC 60076-22-7 Chapter 6.6.5.2.3	Duration test at least 100 regenerations passed

5 Application table

Application	Device model	Silica gel
Tap changer	DB100	1.1 kg
Arc suppression coil (Petersen coil)	DB100	1.1 kg
Air-filled cable boxes	DB100	1.1 kg
Oil-filled cable boxes	DB100	1.1 kg
Traction transformers	DB100	1.1 kg
Network transformers ≤ 40 MVA	DB100T	1.1 kg
Network transformers and machine transformers >40 MVA ≤200 MVA	DB200T	2.2 kg
Network shell transformers > 200 MVA	DB200D-T or 2 x DB200T[2)]	4.4 kg
Phase shifters ≤ 40 MVA	DB100T	1.1 kg
Phase shifters > 40 MVA ≤ 200 MVA	DB200T	2.2 kg
Phase shifters > 200 MVA	DB200D-T or 2 x DB200T[2)]	4.4 kg
Reactors ≤ 40 MVAr	DB100T	1.1 kg
Reactors > 40 MVAr ≤ 200 MVAr	DB200T	2.2 kg
Reactors > 200 MVAr	DB200D-T or 2 x DB200T[2)]	4.4 kg
High voltage DC transmission (HVDCT) transformers	DB200D-T or 2 x DB200T[2)]	4.4 kg
Furnace transformers	DB200G	4.4 kg
Underground hall transformers	DB200G	4.4 kg
GSU machine transformers	DB200G	4.4 kg

Device model	Heating current [1)]		Silica gel	Control [3)]
	U_V = 120 V	U_V = 230 V		
DB100	1.2 A	0.6 A	1.1 kg	Alpha
DB100T	1.2 A	0.6 A	1.1 kg	Beta
DB200T	2.3 A	1.2 A	2.2 kg	Beta
DB200D-T	4.7 A	2.4 A	4.4 kg	Beta
DB200G	2.3 A	1.2 A	4.4 kg	Gamma

1) Heating current during the heating process (approx. 1–2 min. after heating activation).

2) Mount individually on the conservator tank, no parallel mounting (see mounting recommendations).

3) **Alpha control:** Status-dependent control of the heat-drying process through humidity monitoring.
Beta controller (suffix T in the type designation): Self-learning system with status-dependent control of the heat-drying procedure through humidity monitoring and temperature-dependent determination of the most advantageous time

to perform heat-drying.
Gamma controller: System for applications with non-periodic breathing behavior. By monitoring the air humidity, the dehydrating cylinders are alternately regenerated based on status.

6 Drawings

The product may have been altered since this document was published.

1 DIN-Flansch ähnlich / DIN FLANGE SIMILAR TO DIN 42562-3

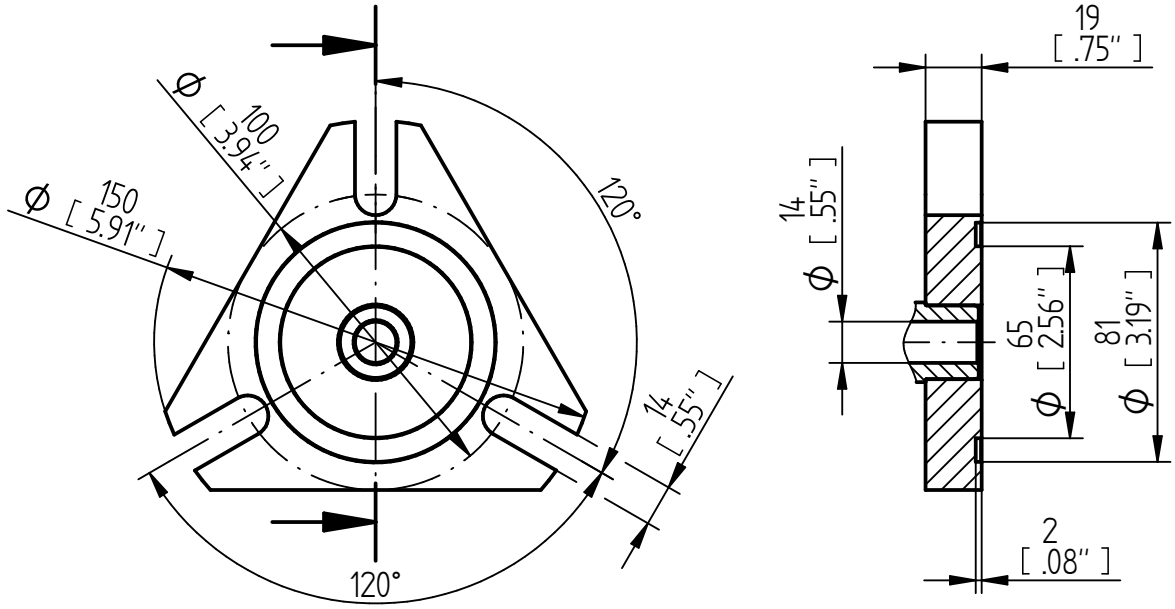

2 RM-Flansch nach / RM FLANGE IN ACCORDANCE WITH DIN 2558

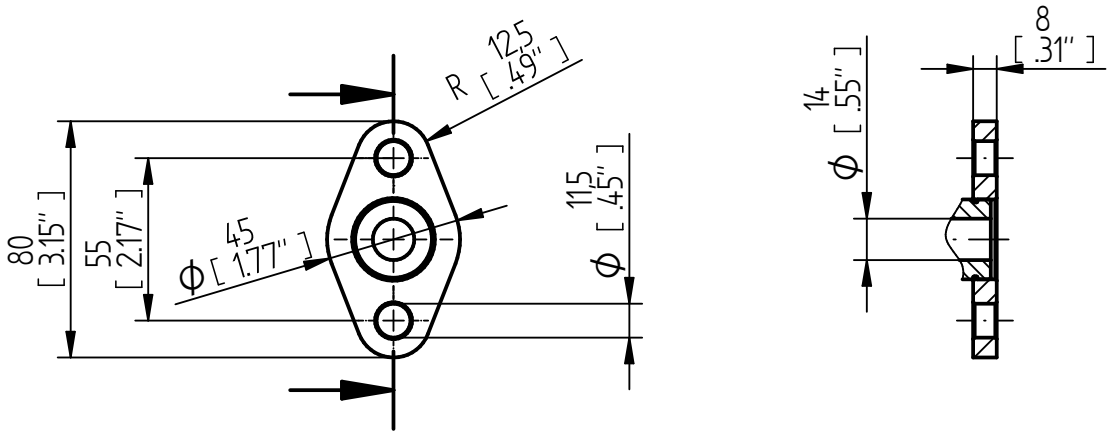

3 Rundflansch für 1/2"-Schrauben / FLANGE FOR 1/2" SCREWS

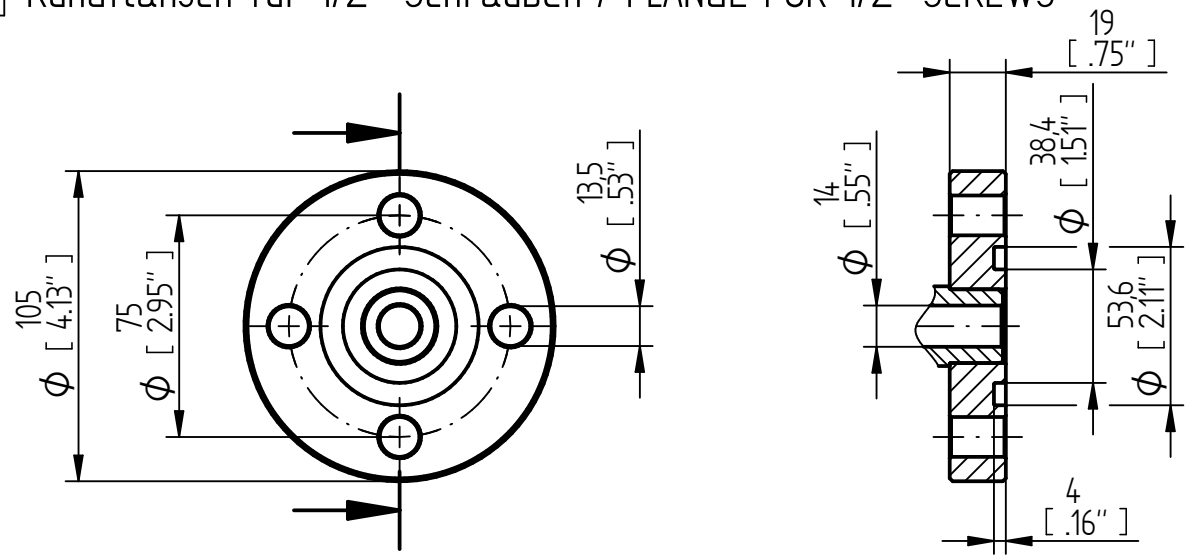

© MASCHINENFABRIK REINHAUSEN GMBH 2019
Weitergabe sowie Vervielfältigung dieses Dokuments, Verwertung und Mitteilung seines Inhaltes sind verboten, soweit nicht ausdrücklich gestattet.
Zuwiderhandlungen verpflichten zu Schadenersatz. Alle Rechte für den Fall der Patent-, Gebrauchsmuster- oder Designeintragung vorbehalten.

	Datum	Name	Dokumnummer	
Gez.	28.01.2019	RAEDLINGER	SED 6653712 000 00	Maßstab
Gepr.	30.01.2019	HUBERTHO	Änderungsnummer	1:2,5
Norm.	30.01.2019	KLEYN	1090594	

Maßangaben in mm, soweit nicht anders angegeben

MTRAB® Standard-Flanschanschlüsse
MTRAB® STANDARD FLANGE CONNECTIONS
Maßzeichnung / DIMENSION DRAWING

Serialnummer

Materialnummer 101227020M

Blatt 1 / 1

A4

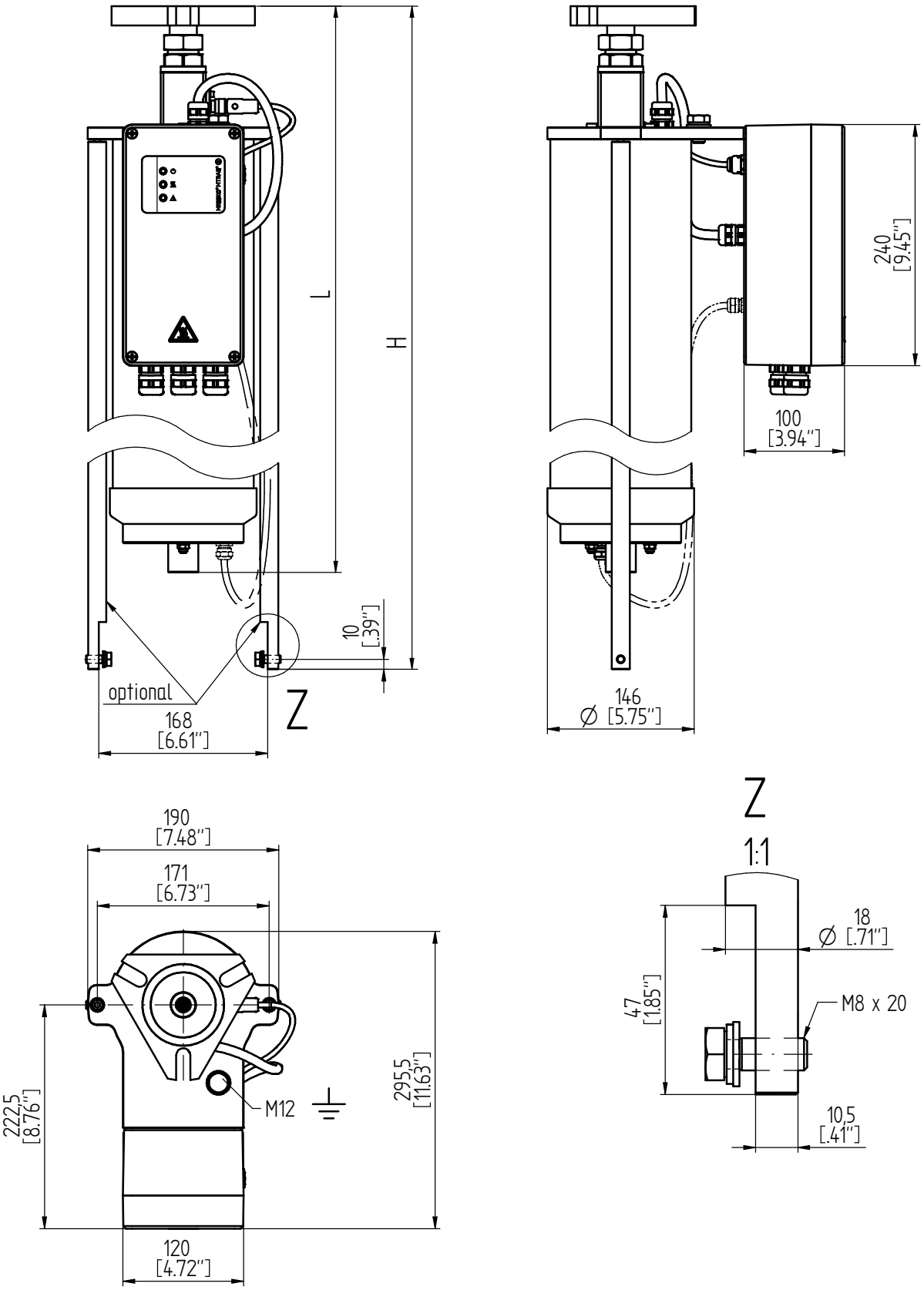

MTRAB-Abmessung mit Flansch / MTRAB DIMENSIONS WITH FLANGE	DB100 L	DB100 H	DB200 L	DB200 H
DIN-Flansch / DIN FLANGE	454,5 [17.89"]	634 [24.96"]	684,5 [27.11"]	781 [30.75"]
RM-Flansch / RM FLANGE	458,5 [18.05"]	638 [25.12"]	-	-
1/2"-Schrauben / 1/2" SCREWS	454,5 [17.89"]	634 [24.96"]	684,5 [27.11"]	781 [30.75"]

MASCHINENFABRIK REINHAUSEN GMBH COPYRIGHT RESERVED
THE REPRODUCTION, DISTRIBUTION AND UTILIZATION OF THIS DOCUMENT AS WELL AS THE COMMUNICATION OF ITS CONTENTS TO OTHERS WITHOUT EXPRESS AUTHORIZATION IS PROHIBITED. OFFENDERS WILL BE HELD LIABLE FOR THE PAYMENT OF DAMAGES. ALL RIGHTS RESERVED IN THE EVENT OF THE GRANT OF A PATENT, UTILITY MODEL OR DESIGN.

	DATE	NAME	DOCUMENT NO.	
DFTR.	05.07.2023	SCHAEFERB	SED 6356077 000 01	
CHKD.	05.07.2023	THIELEK	CHANGE NO.	SCALE
STAND.	06.07.2023	WANNINGER	1123443	1:4

DIMENSION IN mm EXCEPT AS NOTED

MR

MTRAB® DB100/DB200 mit seitlicher Zusatzbefestigung /
MTRAB® DB100/DB200 WITH ADDITIONAL FASTENING POINTS
Maßzeichnung / DIMENSION DRAWING

SERIAL NUMBER

MATERIAL NUMBER 101213141M

SHEET 1 / 1

A3

MASCHINENFABRIK REINHAUSEN GMBH COPYRIGHT RESERVED
THE REPRODUCTION, DISTRIBUTION AND UTILIZATION OF THIS DOCUMENT AS WELL AS THE COMMUNICATION OF ITS CONTENTS TO OTHERS WITHOUT EXPRESS AUTHORIZATION IS PROHIBITED. OFFENDERS WILL BE HELD LIABLE FOR THE PAYMENT OF DAMAGES. ALL RIGHTS RESERVED IN THE EVENT OF THE GRANT OF A PATENT, UTILITY MODEL OR DESIGN.

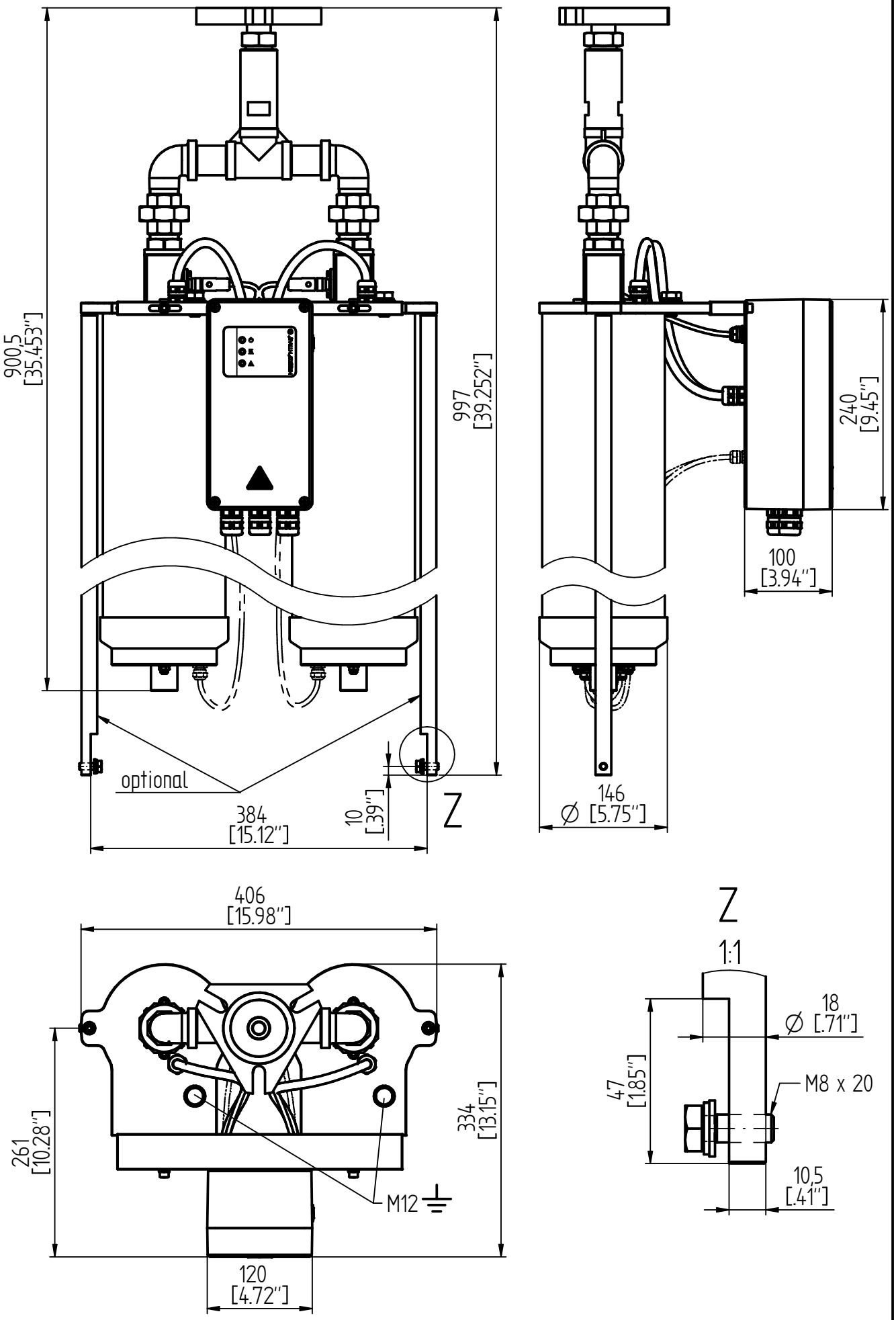

	DATE	NAME	DOCUMENT NO.	
DFTR.	05.07.2023	SCHAEFERB	SED 6367297 000 02	
CHKD.	05.07.2023	THIELEK	CHANGE NO.	SCALE
STAND.	06.07.2023	WANNINGER	1123443	1:4

DIMENSION IN mm EXCEPT AS NOTED

MR

MTRAB® DB200D-T mit seitlicher Zusatzbefestigung /
MTRAB® DB200D-T WITH ADDITIONAL FASTENING POINTS
Maßzeichnung / DIMENSION DRAWING

SERIAL NUMBER

MATERIAL NUMBER 101213172M

SHEET 1 / 1

A3

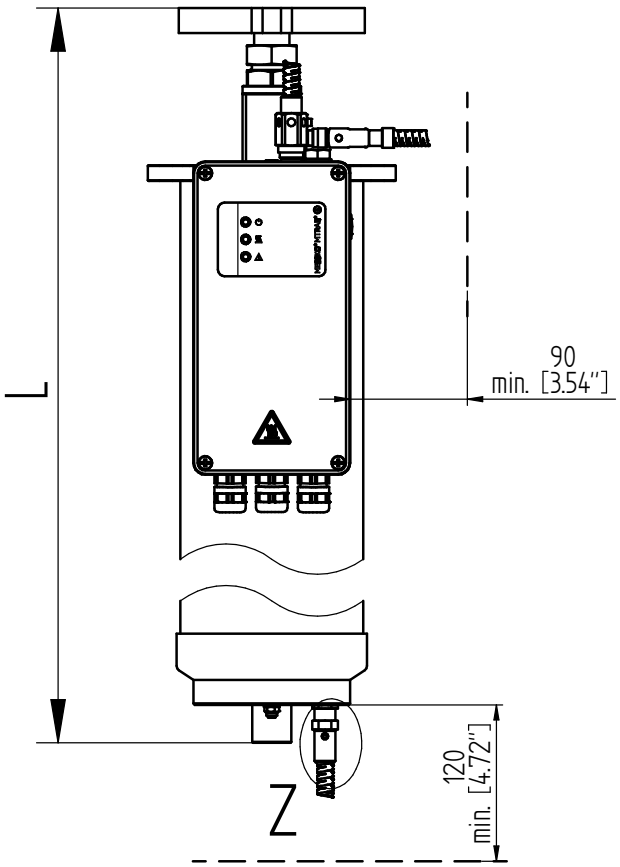

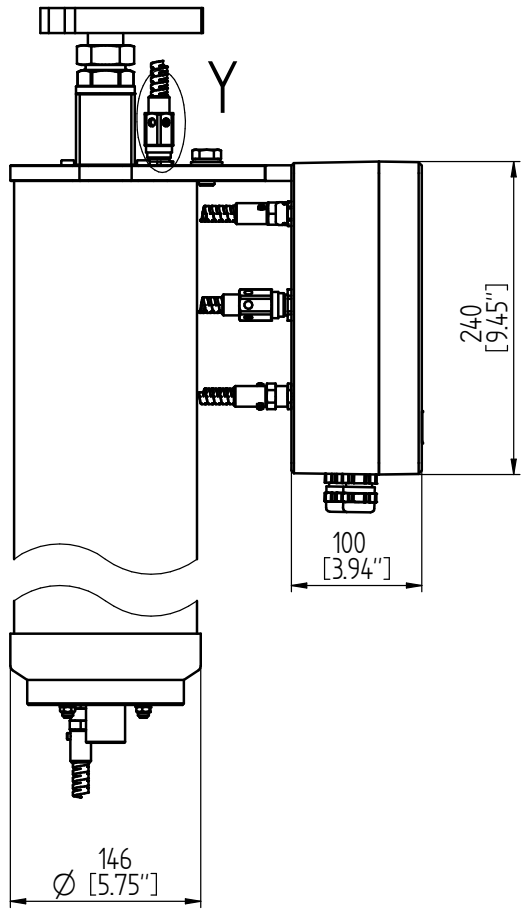

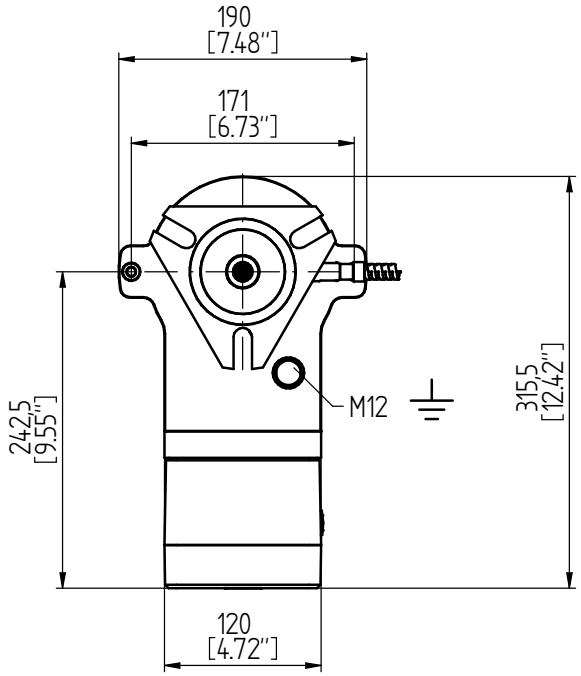

Kabelschutz /
CABLE PROTECTION

Y 1:1

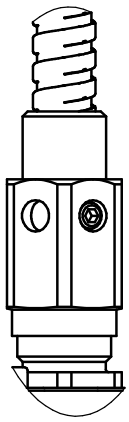

Z 1:1

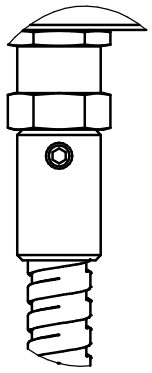

MTRAB-Abmessung mit Flansch / MTRAB DIMENSIONS WITH FLANGE	DB100 L	DB200 L
DIN-Flansch / DIN FLANGE	454,5 [17.89"]	684,5 [27.11"]
RM-Flansch / RM FLANGE	458,5 [18.05"]	-
1/2"-Schrauben / 1/2" SCREWS	454,5 [17.89"]	684,5 [27.11"]

MASCHINENFABRIK REINHAUSEN GMBH COPYRIGHT RESERVED
THE REPRODUCTION, DISTRIBUTION AND UTILIZATION OF THIS DOCUMENT AS WELL AS THE COMMUNICATION OF ITS CONTENTS TO OTHERS WITHOUT EXPRESS AUTHORIZATION IS PROHIBITED. OFFENDERS WILL BE HELD LIABLE FOR THE PAYMENT OF DAMAGES. ALL RIGHTS RESERVED IN THE EVENT OF THE GRANT OF A PATENT, UTILITY MODEL OR DESIGN.

	DATE	NAME	DOCUMENT NO.	
DFTR.	05.07.2023	SCHAEFERB	SED 6600056 000 01	
CHKD.	05.07.2023	THIELEK	CHANGE NO.	SCALE
STAND.	06.07.2023	WANNINGER	1123443	1:4

DIMENSION IN mm EXCEPT AS NOTED

MR

MTRAB® DB100/DB200 mit Kabelschutz (optional) /
MTRAB® DB100/DB200 WITH CABLE PROTECTION (OPTIONAL)
Maßzeichnung / DIMENSION DRAWING

SERIAL NUMBER

MATERIAL NUMBER 101235301M

SHEET 1 / 1

A3

MASCHINENFABRIK REINHAUSEN GMBH COPYRIGHT RESERVED
THE REPRODUCTION, DISTRIBUTION AND UTILIZATION OF THIS DOCUMENT AS WELL AS THE COMMUNICATION OF ITS CONTENTS TO OTHERS WITHOUT EXPRESS AUTHORIZATION IS PROHIBITED. OFFENDERS WILL BE HELD LIABLE FOR THE PAYMENT OF DAMAGES. ALL RIGHTS RESERVED IN THE EVENT OF THE GRANT OF A PATENT, UTILITY MODEL OR DESIGN.

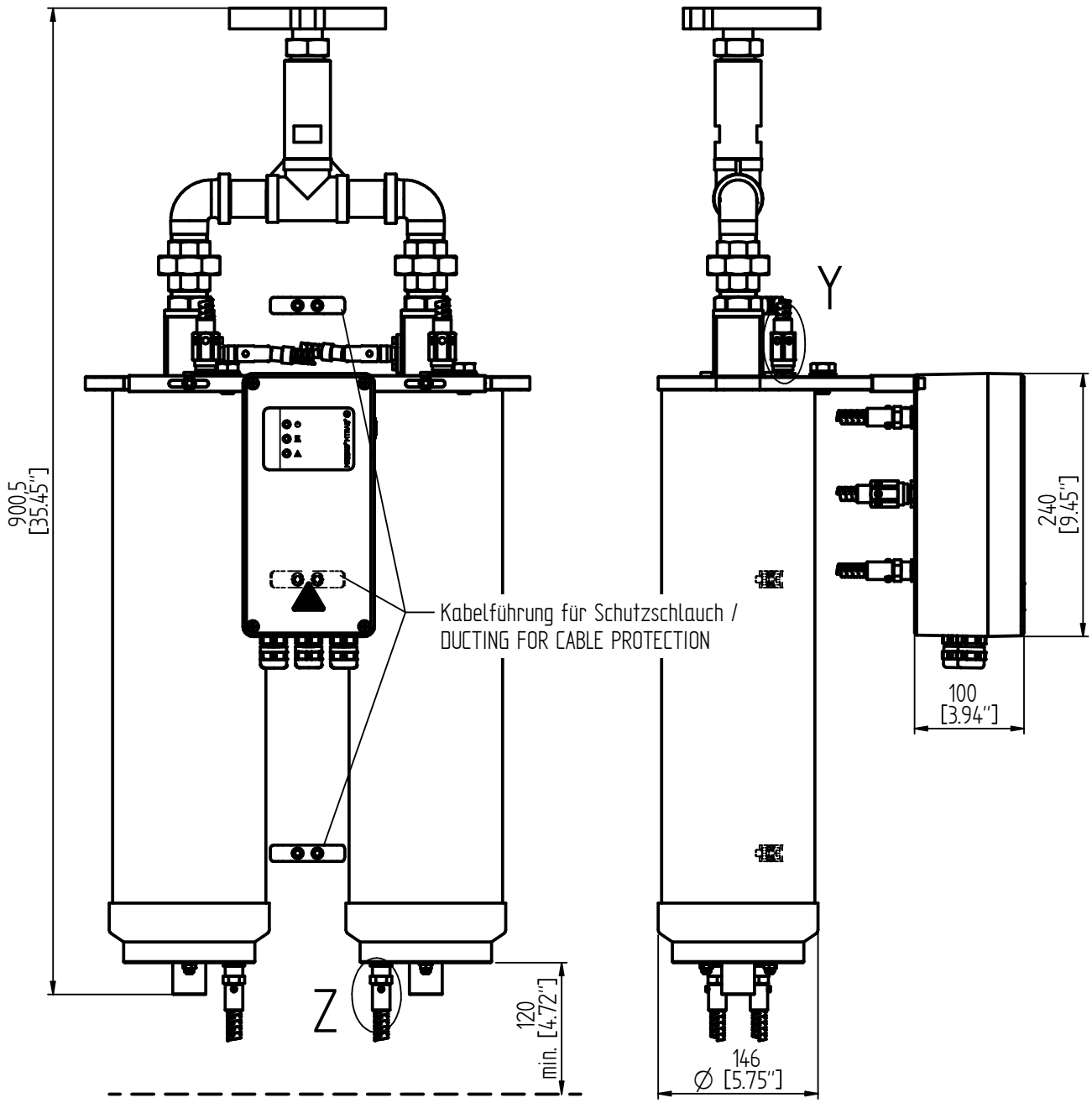

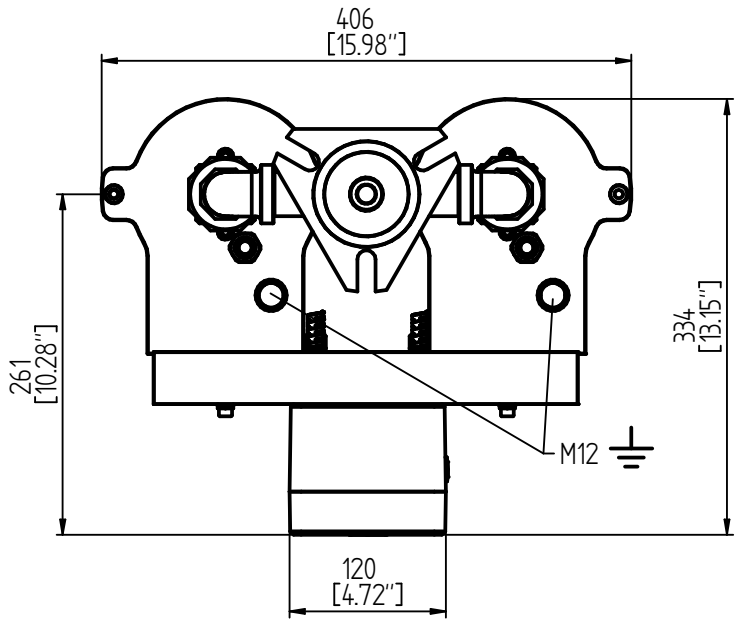

Kabelschutz /
CABLE PROTECTION

Y 1:1

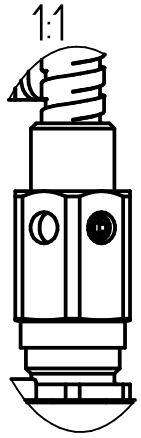

Z 1:1

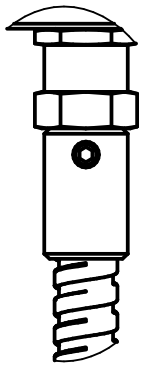

	NAME	DATE
DFTR.	SCHAEFERB	05.07.2023
CHKD.	THIELEK	05.07.2023
STAND.	WANNINGER	06.07.2023

DOCUMENT NO.	SCALE
SED 6600296 000 02	1:4
CHANGE NO.	
1123443	

DIMENSION IN mm EXCEPT AS NOTED

MR

MTRAB® DB200D-T mit Kabelschutz (optional) /
MTRAB® DB200D-T WITH CABLE PROTECTION (OPTIONAL)
Maßzeichnung / DIMENSION DRAWING

SERIAL NUMBER

MATERIAL NUMBER 101235312M

SHEET 1 / 1

A3

MASCHINENFABRIK REINHAUSEN GMBH COPYRIGHT RESERVED
THE REPRODUCTION, DISTRIBUTION AND UTILIZATION OF THIS DOCUMENT AS WELL AS THE COMMUNICATION OF ITS CONTENTS TO OTHERS WITHOUT EXPRESS AUTHORIZATION IS PROHIBITED. OFFENDERS WILL BE HELD LIABLE FOR THE PAYMENT OF DAMAGES. ALL RIGHTS RESERVED IN THE EVENT OF THE GRANT OF A PATENT, UTILITY MODEL OR DESIGN.

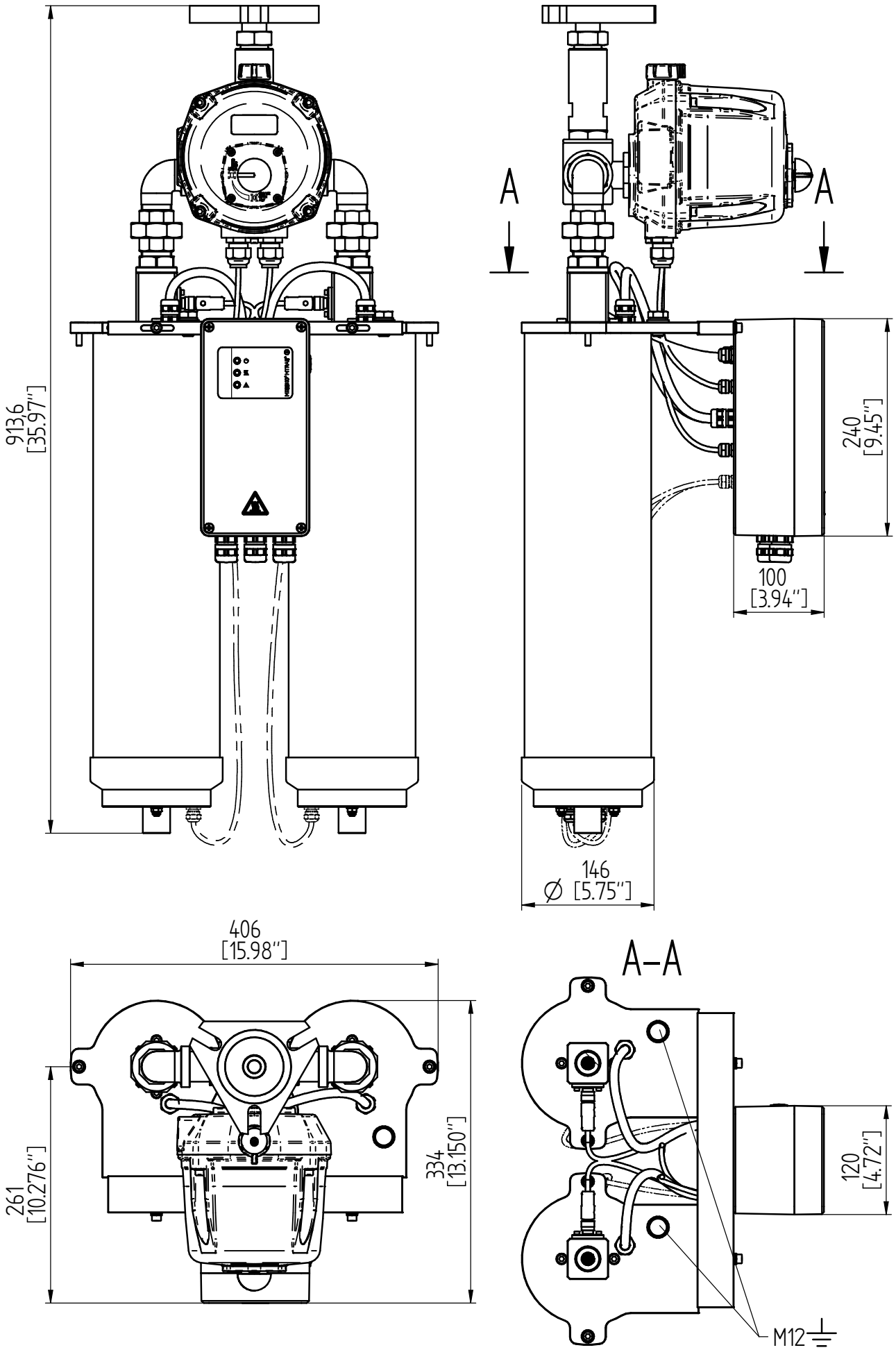

	DATE	NAME	DOCUMENT NO.	
DFTR.	05.07.2023	SCHAEFERB	SED 6368543 000 02	
CHKD.	05.07.2023	THIELEK	CHANGE NO.	SCALE
STAND.	06.07.2023	WANNINGER	1123443	1:4

DIMENSION IN mm EXCEPT AS NOTED

MR

MTRAB® DB200G mit Gammasteuerung /
MTRAB® DB200G WITH GAMMA CONTROL
Maßzeichnung / DIMENSION DRAWING

SERIAL NUMBER

MATERIAL NUMBER 101213182M

SHEET 1 / 1

A3

Maß / DIMENSION	DB100	DB200
L	260 [10.24"]	485 [19.10"]

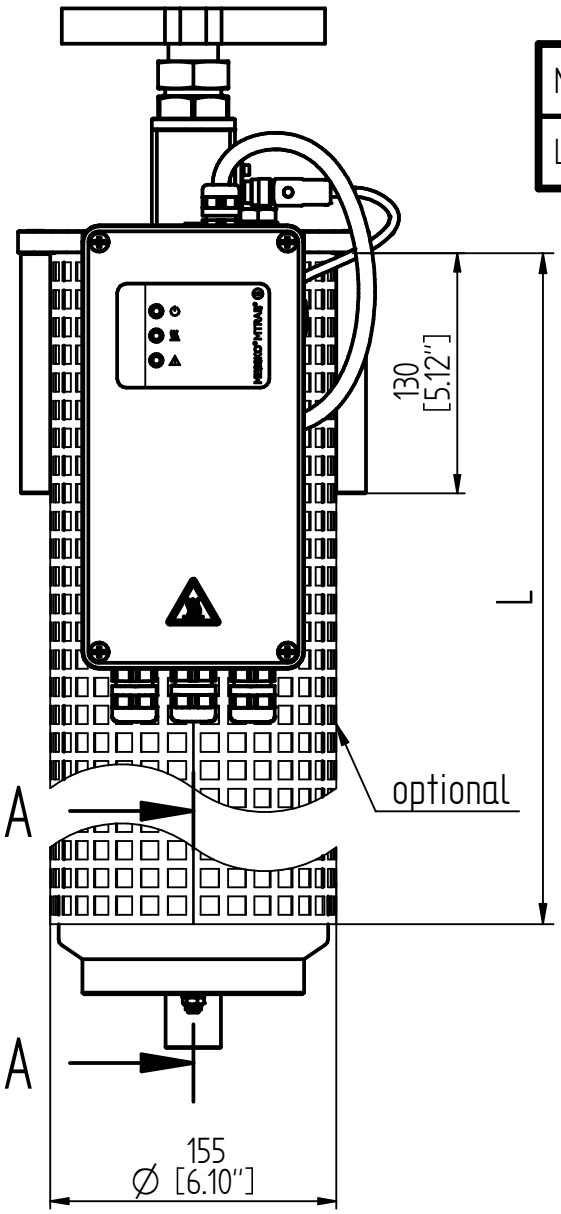

A–A
1:1

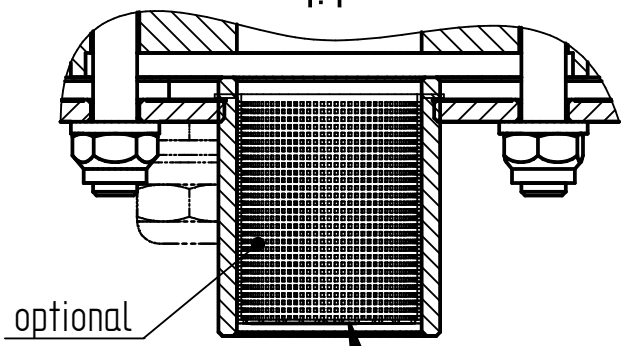

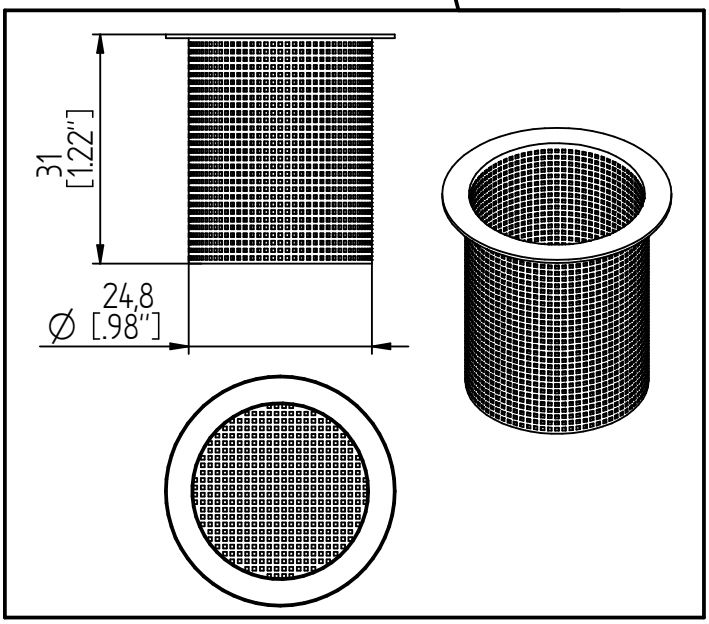

© MASCHINENFABRIK REINHAUSEN GMBH 2018
THE REPRODUCTION, DISTRIBUTION AND UTILIZATION OF THIS DOCUMENT AS WELL AS THE COMMUNICATION OF ITS CONTENTS TO OTHERS WITHOUT EXPRESS AUTHORIZATION IS PROHIBITED. OFFENDERS WILL BE HELD LIABLE FOR THE PAYMENT OF DAMAGES. ALL RIGHTS RESERVED IN THE EVENT OF THE GRANT OF A PATENT, UTILITY MODEL OR DESIGN.

	DATE	NAME	DOCUMENT NO.
DFTR.	05.07.2023	SCHAEFERB	SED 6356099 000 01
CHKD.	05.07.2023	THIELEK	CHANGE NO. / SCALE
STAND.	06.07.2023	WANNINGER	1123443 / 1:4

DIMENSION IN mm EXCEPT AS NOTED

MTRAB® mit Schutzgitter und Insektenschutzgitter /
WITH PROTECTIVE GRATE AND INSECT PROTECTIVE GRATE
Maßzeichnung / DIMENSION DRAWING

SERIAL NUMBER

MATERIAL NUMBER 101213191M

SHEET 1 / 1

A4

	DATE	NAME	DOCUMENT NO.	
DFTR.	04.07.2025	SCHAEFERB	SED 12299700 000 00	
CHKD.	07.07.2025	THIELEK	CHANGE NO.	SCALE
STAND.	07.07.2025	KLEYN	1138049	1:2

MASCHINENFABRIK REINHAUSEN GMBH COPYRIGHT RESERVED
THE REPRODUCTION, DISTRIBUTION AND UTILIZATION OF THIS DOCUMENT AS WELL AS THE COMMUNICATION OF ITS CONTENTS TO OTHERS WITHOUT EXPRESS AUTHORIZATION IS PROHIBITED. OFFENDERS WILL BE HELD LIABLE FOR THE PAYMENT OF DAMAGES. ALL RIGHTS RESERVED IN THE EVENT OF THE GRANT OF A PATENT, UTILITY MODEL OR DESIGN.

DIMENSION IN mm EXCEPT AS NOTED

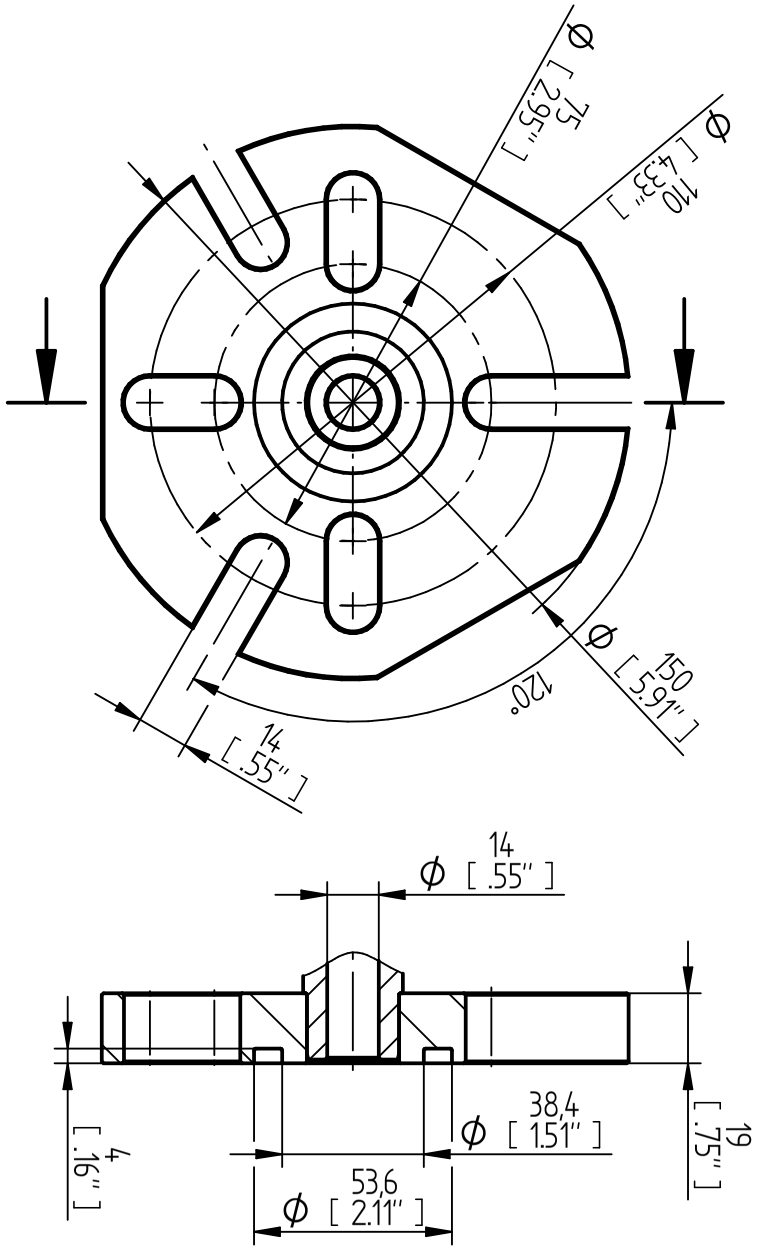

TRANSFORMER ACCESSORIES
MTRAB® UNIVERSAL FLANGE
Maßzeichnung / DIMENSION DRAWING

MATERIAL NUMBER 10190325OM

SERIAL NUMBER

SHEET 1 / 1

A4

MASCHINENFABRIK REINHAUSEN GMBH COPYRIGHT RESERVED
THE REPRODUCTION, DISTRIBUTION AND UTILIZATION OF THIS DOCUMENT AS WELL AS THE COMMUNICATION OF ITS CONTENTS TO OTHERS WITHOUT EXPRESS AUTHORIZATION IS PROHIBITED. OFFENDERS WILL BE HELD LIABLE FOR THE PAYMENT OF DAMAGES. ALL RIGHTS RESERVED IN THE EVENT OF THE GRANT OF A PATENT, UTILITY MODEL OR DESIGN.

(1) Designvorschlag zur Eigenbeschaffung, nicht im Lieferumfang / SUGGESTION OF DESIGN IN SELF-PROCUREMENT, NOT INCLUDED IN SCOPE OF DELIVERY

(2) AlMgSi3 eloxiert / AlMgSi3 ANODIZED

(3) Fixieren mit Kabelbinder / FIX WITH CABLE STRAB

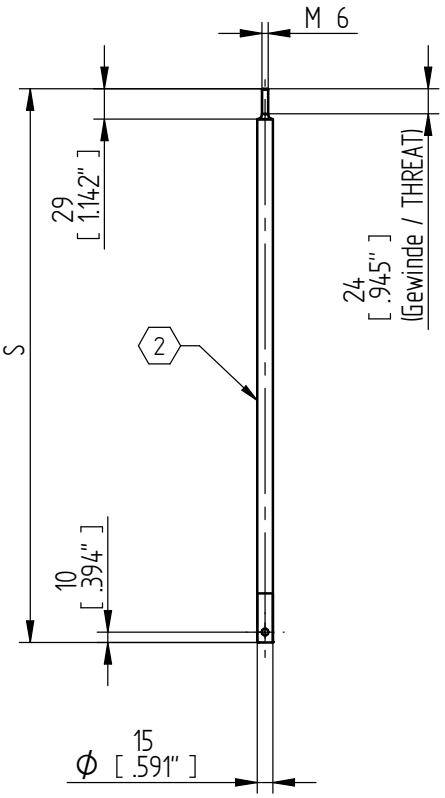

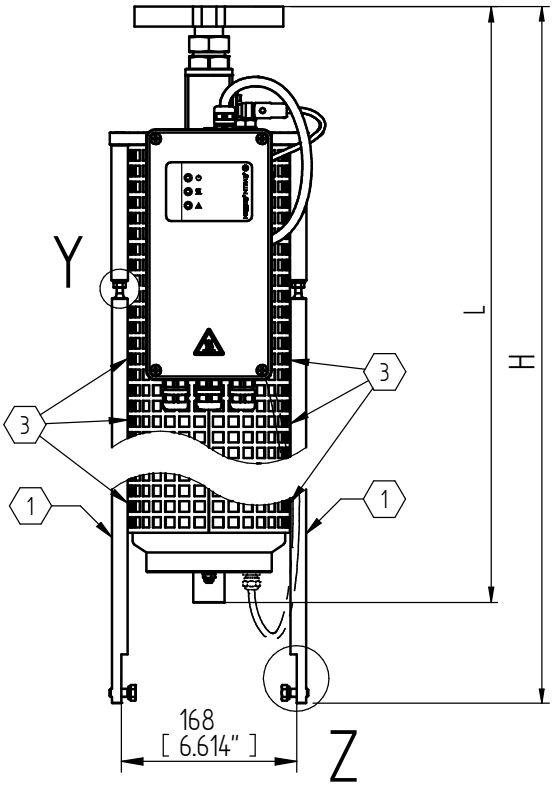

Y
1:1

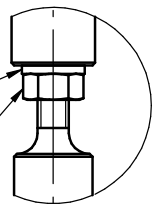

(1) Sicherungselement / ROTATION LOCK DIN 25201
6 kt Mutter / 6 KT FIXING NUT DIN 934

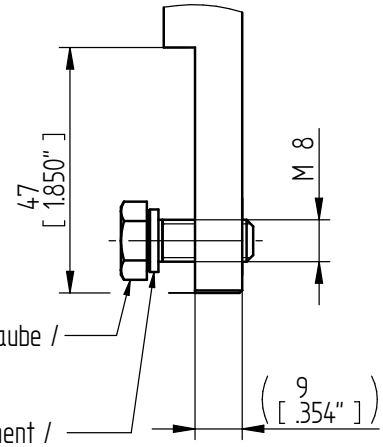

(1) Sechskantschraube / SCREW DIN 933
Sicherungselement / ROTATION LOCK DIN 25201

MTRAB-Abmessung / MTRAB DIMENSIONS	DB100 mit Schutzgitter / DB100 WITH PROTECTIVE GRID L	DB100 mit Schutzgitter / DB100 WITH PROTECTIVE GRID H	DB100 Länge Abstützstange / DB100 LENGTH SUPPORT BAR S	DB200 mit Schutzgitter / DB200 WITH PROTECTIVE GRID L	DB200 mit Schutzgitter / DB200 WITH PROTECTIVE GRID H	DB200 Länge Abstützstange / DB200 LENGTH SUPPORT BAR S
DIN-Flansch / DIN FLANGE	454,5 [17.890"]	634 [24.960"]	-	684,5 [27.110"]	781 [30.750"]	-
RM-Flansch / RM FLANGE	458,5 [18.050"]	638 [25.120"]	-	-	-	-
1/2"-Schrauben / 1/2" SCREWS	454,5 [17.890"]	634 [24.960"]	-	684,5 [27.110"]	781 [30.750"]	-
Abstützstange / SUPPORT BAR	-	-	383,5 [15,090"]	-	-	530,5 [20,880"]

	DATE	NAME	DOCUMENT NO.	
DFTR.	10.09.2024	THIELEK	SED 11237670 000 00	SCALE 1:5
CHKD.	11.09.2024	SCHAEFERB	CHANGE NO. 1129776	
STAND.	12.09.2024	KLEYN		

DIMENSION IN mm EXCEPT AS NOTED

TRANSFORMER ACCESSORIES
MTRAB® seitliche Befestigung/ADDITIONAL FASTENING POINTS
MTRAB® mit Schutzgitter/WITH PROTECTIVE GRATE

SERIAL NUMBER

MATERIAL NUMBER 101831700M | SHEET 1/ 1

A3

MASCHINENFABRIK REINHAUSEN GMBH COPYRIGHT RESERVED
THE REPRODUCTION, DISTRIBUTION AND UTILIZATION OF THIS DOCUMENT AS WELL AS THE COMMUNICATION OF ITS CONTENTS TO OTHERS WITHOUT EXPRESS AUTHORIZATION IS PROHIBITED. OFFENDERS WILL BE HELD LIABLE FOR THE PAYMENT OF DAMAGES. ALL RIGHTS RESERVED IN THE EVENT OF THE GRANT OF A PATENT, UTILITY MODEL OR DESIGN.

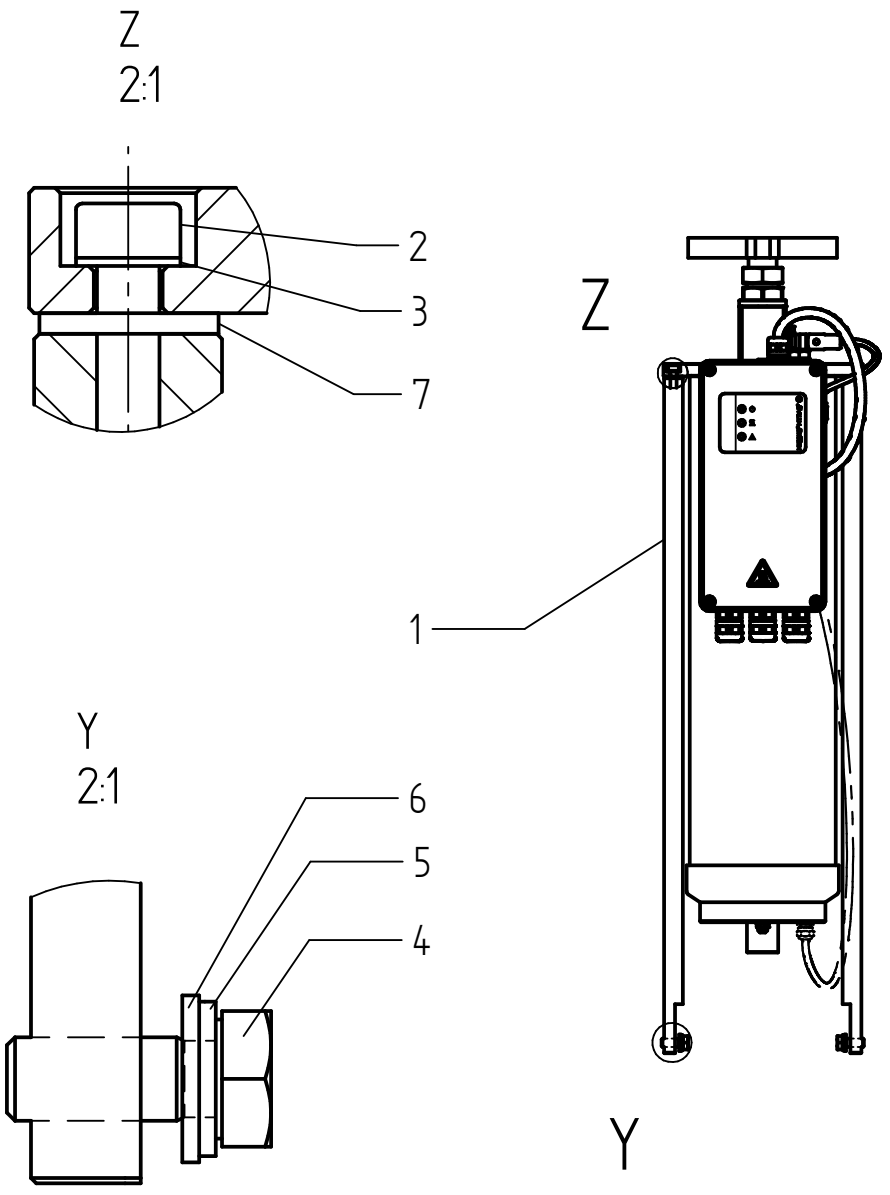

Pos. / POS.	Menge / QUANTITY	Bt-nr.: / PC-NO.:	Benennung / NAME	DB100 Art.-Nr. / ITEM-NO.:	DB200 Art-Nr. / ITEM-NO.
1	2	ENG-001199	Abstützstange / SUPPORT BAR	MS200470xx	MS200471xx
2	2	STD-000052	Zylinderschraube / SCREW M6x20 DIN 912	MS920370xx	MS920370xx
3	2	STD-000053	Federring / SPRING WASHER A6 DIN 127	MS920341xx	MS920341xx
4	2	STD-000348	6kt. Schraube / SCREW M8x20 DIN 933	MS920369xx	MS920369xx
5	2	STD-000347	Federring / SPRING WASHER A8 DIN 128	MS920510xx	MS920510xx
6	2	STD-000346	Scheibe / WASHER 8,4 DIN 125	MS920346xx	MS920346xx
7	2	ENG-002435	Distanzscheibe / DISTANCE WASHER	MS200480xx	MS200480xx

	DATE	NAME	DOCUMENT NO.	
DFTR.	10.09.2024	THIELEK	SED 11269895 000 00	
CHKD.	11.09.2024	SCHAEFERB	CHANGE NO.	SCALE
STAND.	12.09.2024	KLEYN	1129776	1:5

DIMENSION IN mm EXCEPT AS NOTED

MR

TRANSFORMER ACCESSORIES
MTRAB® seitliche Befestigung/ADDITIONAL FASTENING POINTS
MTRAB® ohne Schutzgitter/WITHOUT PROTECTION GRATE

SERIAL NUMBER

MATERIAL NUMBER 101832640M

SHEET 1/ 1

A3

Maschinenfabrik Reinhausen GmbH
Falkensteinstrasse 8
93059 Regensburg
Germany
+49 941 4090-0
info@reinhausen.com
reinhausen.com

Please note:
The data in our publications may differ from the data of the devices delivered.
We reserve the right to make changes without notice.
6822884/05 Ver. 2.5 EN - MESSKO® MTRAB® Technical data -
08/25
Maschinenfabrik Reinhausen GmbH 2025

THE POWER BEHIND POWER.